ECE 6775
High-Level Digital Design Automation
Fall 2024

Scheduling

Cornell University

Announcements

- Lab 2 due tomorrow
- Lab 3 will be released soon
- Tuesday lecture (Oct 1) rescheduled to Friday, **Oct 4 at 4:30pm, Rhodes 310**
- Neural network tutorial on Thursday (Oct 3) by Jordan Dotzel
  - Useful for Lab 4 and final project

LLVM: A Foundational IR for Modern Compilers

- Formerly Low Level Virtual Machine
  - Brainchild of Chris Lattner and Vikram Adve back in 2000
  - ACM Software System Award in 2012
  - LLVM is widely used in industry and academia (including the HLS tool in our class)

- **The core of LLVM is the SSA-base IR**
  - Language independent, target independent, easy to use
  - RISC-like virtual instructions, unlimited registers, exception handling, etc.

- Provides modular & reusable components for building compilers
  - Components are ideally language/target independent
  - Allows choice of the right component for the job
  - Many high-quality libraries (components) with clean interfaces
    - Optimizations, analyses, modular code generator, profiling, link time optimization, ARM/X86/PPC/SPARC code generator …
    - Tools built from the libraries: C/C++/ObjC compiler, modular optimizer, linker, debugger, LLVM JIT …

Example: An LLVM Loop

```
for (i=0; i<N; ++i)
   foo(A[i], &P);
```

```
loop:
  %i.1 = phi i5 [ 0, %bb0 ], [ %i.2, %loop ]
  %AiAddr = getelementptr float* %A, i32 %i.1
  call void %foo(float %AiAddr, %pair* %P)
  %i.2 = add i5 %i.1, 1
  %tmp = icmp eq i5 %i.1, 16
  br i1 %tmp, label %loop, label %outloop
```

- High-level information exposed in the code
  - Explicit dataflow through SSA form
  - Explicit control-flow graph
  - Explicit language-independent type-information
  - Explicit typed pointer arithmetic
    - Preserve array subscript and structure indexing

source: http://llvm.org

Agenda

- Unconstrained scheduling
  - ASAP and ALAP
- Constrained scheduling
  - Resource constrained scheduling (RCS)
  - Exact formulations with integer linear programming (ILP)

Recap: A Typical HLS Flow

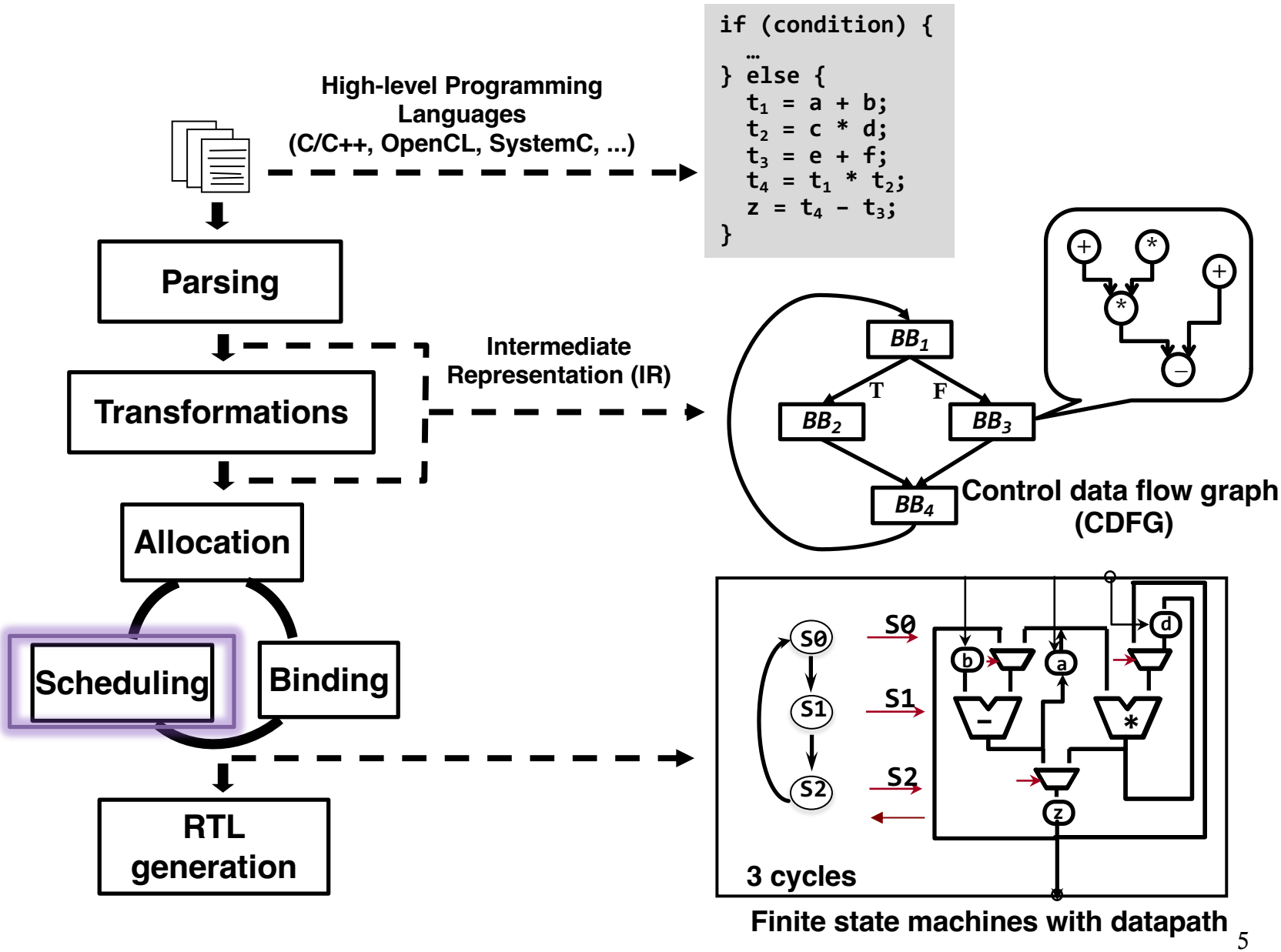

Importance of Scheduling

- Scheduling is a central problem in HLS
  - Introduces clock boundaries to untimed (or partially timed) input specification
  - Has significant impact on the quality of results
    - Frequency
    - Latency
    - Throughput
    - Area
    - Power

    …

Scheduling: Untimed to Timed

Untimed	Combinational for Latency	Sequential for Area	Pipelined for Throughput
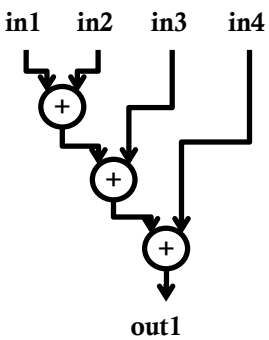 Control-Data Flow Graph (CDFG)	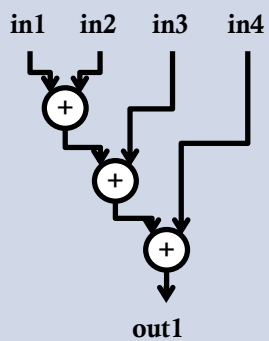	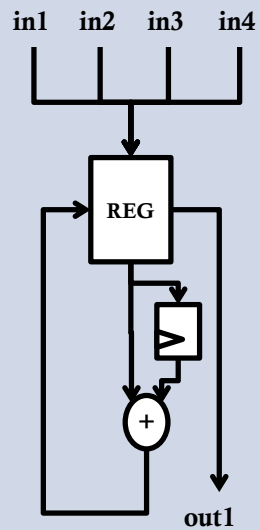	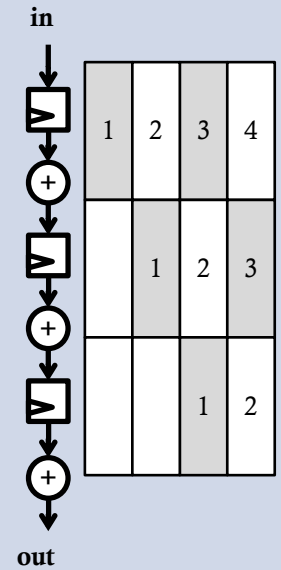
$out1 = f(in1, in2, in3, in4)$	$t_{clk} \approx 3 * d_{add}$ $T_1 = 1 / t_{clk}$ $A_1 = 3 * A_{add}$	$t_{clk} \approx d_{add} + d_{setup}$ $T_2 = 1 / (3 * t_{clk})$ $A_2 = A_{add} + 2 * A_{reg}$	$t_{clk} \approx d_{add} + d_{setup}$ $T_3 = 1 / t_{clk}$ $A_3 = 3 * A_{add} + 6 * A_{reg}$

Scheduling Input

- Control data flow graph (CDFG)
  - Generated by a compiler front end from a high-level specification
  - Nodes: basic blocks & operations
  - Directed edges: data & control dependencies

```
xl = x+dx;
ul = u-3*x*u*dx-3*y*dx
yl = y+u*dx
c = xl<a;
x = xl; u = ul; y = yl;
```

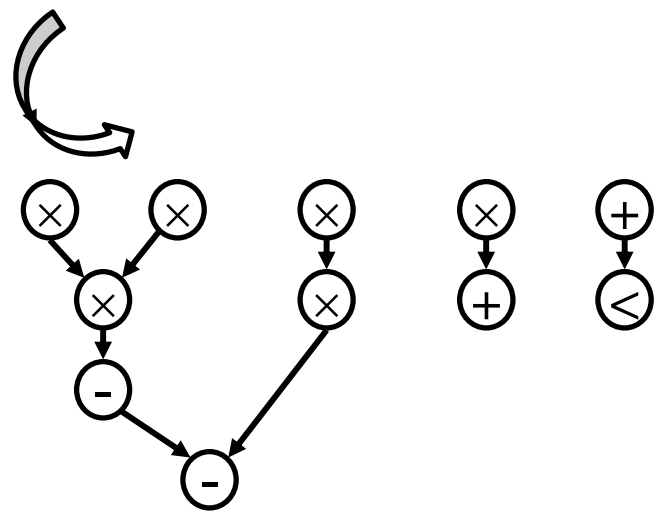

- Without control flow, the basic structure is a data flow graph (DFG)

Scheduling Output

- Scheduling: map operations to states
- Each clock cycle corresponds to a state in the FSM
  - Commonly referred to as control step (c-step)

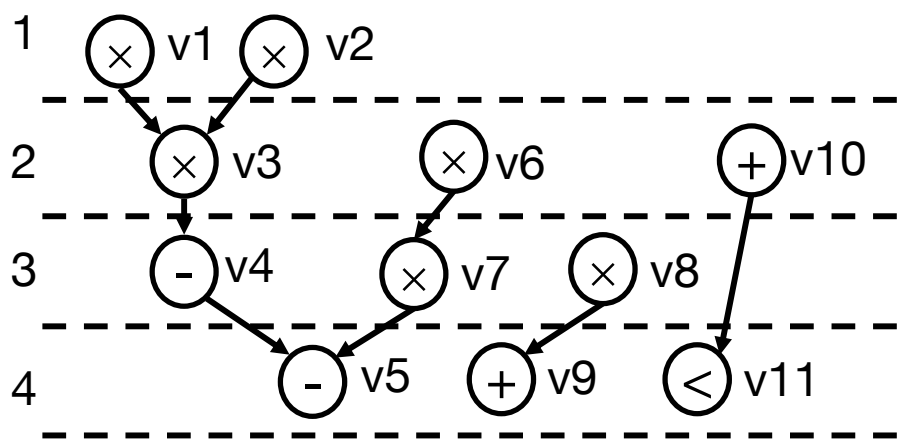

DFG

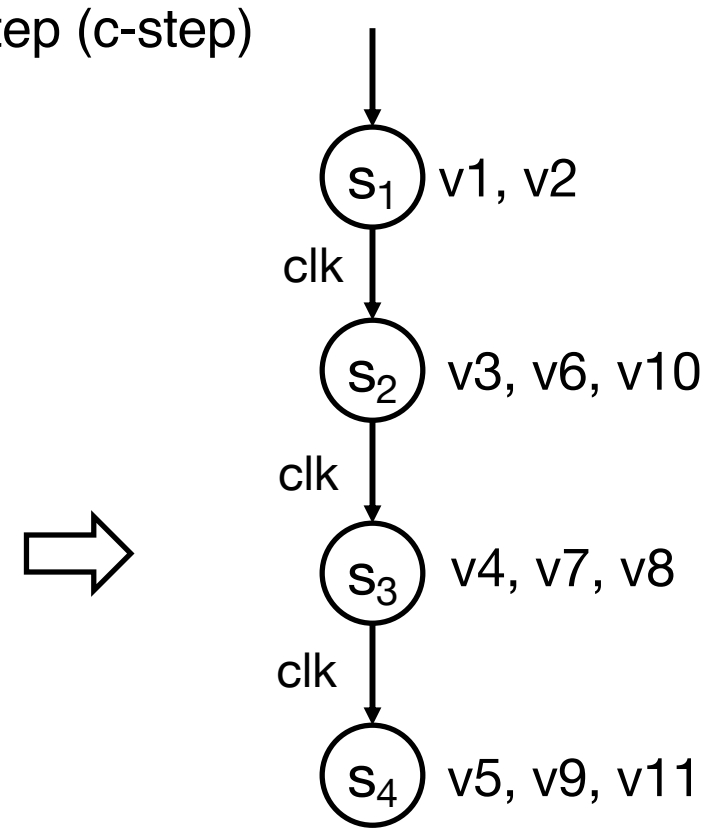

State transition diagram (STG), i.e., FSM

Unconstrained Scheduling

- Only consideration: dependence
- As soon as possible (ASAP)
  - Schedule an operation to the earliest possible step
- As late as possible (ALAP)
  - Schedule an operation to the earliest possible step, without increasing the total latency

ASAP Schedule

Assumption for simplicity:
No combinational chaining of multiple operations in one cycle
(each operation occupies the full cycle)

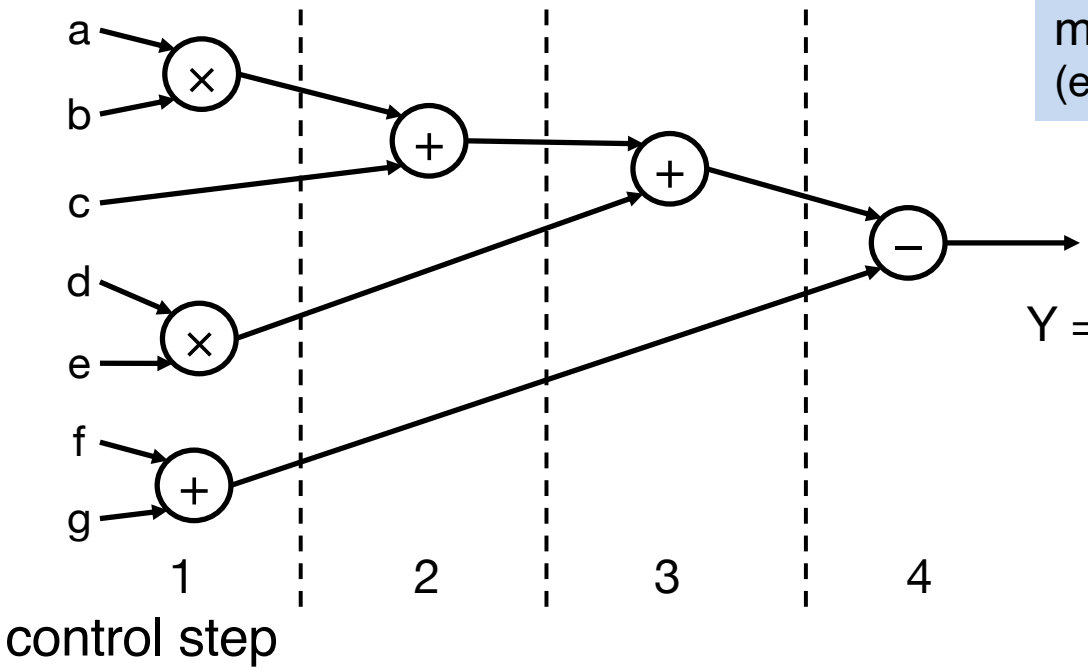

Y = ((a*b)+c)+(d*e)-(f+g)

```
ASAP(G(V, E)):
  V' = Topological_Sort(G)
  foreach v_i in V' :
    // Primary inputs (PIs) to first cycle
    if v_i ∈ PIs: t_i = 1
    // Assume no chaining & single-cycle operations
    else: t_i = max_{j∈pred(i)} {t_j + 1}; // (v_j , v_i ) ∈ E
```

The start time for each operation is the least one allowed by the dependencies

ALAP Schedule

Assumption for simplicity:
No combinational chaining of multiple operations in one cycle
(each operation occupies the full cycle)

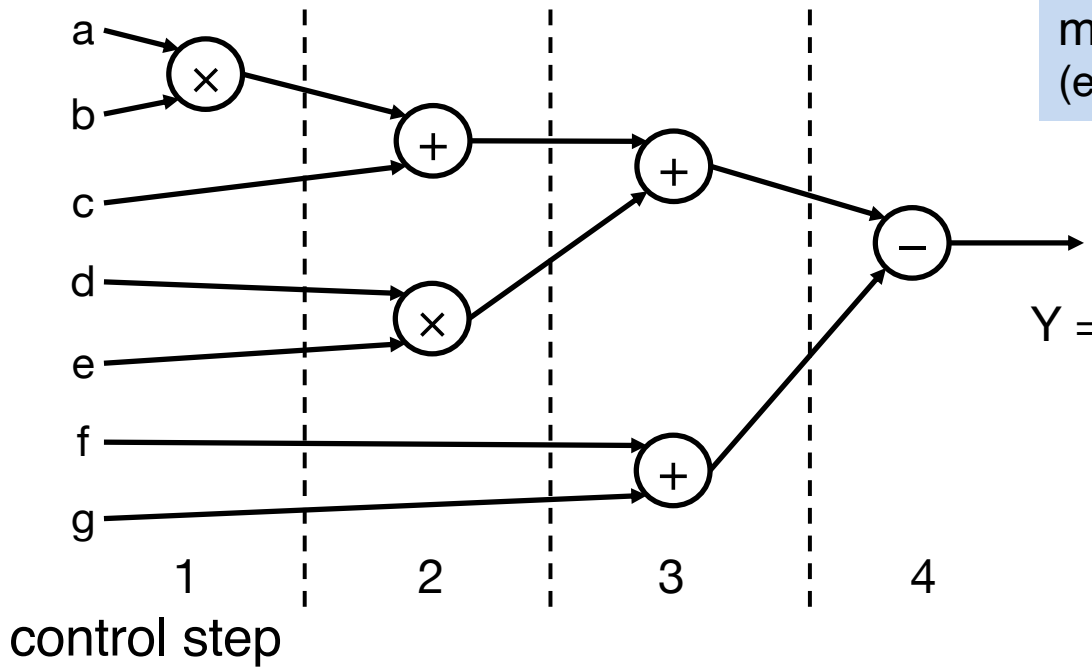

Y = ((a*b)+c)+(d*e)-(f+g)

```
ALAP(G(V, E), L): // L is the latency bound
  V' = Reverse_Topological_Sort(G)
  foreach v_i in V' :
    // Primary outputs (POs) to last cycle
    if  v_i ∈ POs: t_i = L
    // Assume no chaining & single-cycle operations
    else: t_i = min_{k∈succ(i)} {t_k} – 1; // (v_i , v_k ) ∈ E
```

The end time of each operation is the latest one allowed by the dependencies and the latency constraint

Constrained Scheduling in HLS

- Constrained scheduling
  - General case NP-hard
  - Resource-constrained scheduling (RCS)
    - Minimize latency given constraints on area or resources
  - Time-constrained scheduling (TCS)
    - Minimize resources subject to bound on latency

- Exact methods
  - Integer linear programming (ILP)
  - Hu's algorithm for a very restricted problem

- Heuristics
  - List scheduling
  - Force-directed scheduling
  - SDC-based scheduling

  …

Linear Programming

- **Linear programming (LP)** solves the problem of maximizing or minimizing a linear objective function subject to linear constraints
  - Efficiently solvable both in theory and in practice

- **Integer linear programming (ILP)**: in addition to linear constraints and objective, the values for the variables must be integer
  - NP-Hard in general (A special case, 0-1 ILP)
  - Modern ILP solvers can handle problems with nontrivial size

- Enormous number of problems can be expressed in LP or ILP

Canonical Form of ILP

maximize $c_1x_1+c_2x_2+\ldots+c_nx_n$ // objective function

subject to // linear constraints

$a_{11}x_1+a_{12}x_2+\ldots+a_{1n}x_n \leq b_1$

$a_{21}x_1+a_{22}x_2+\ldots+a_{2n}x_n \leq b_2$

….

$a_{m1}x_1+a_{m2}x_2+\ldots+a_{mn}x_n \leq b_m$

$x_i \geq 0$

$x_i \in Z$

x's are the variables (to be solved);
a's, b's, and c's are constants

Vector form

maximize $\mathbf{c}^T\mathbf{x}$ // $\mathbf{c} = (c_1, c_2, \ldots, c_n)$, $\mathbf{x} = (x_1, x_2, \ldots, x_n)$

subject to (s.t.)

$\mathbf{Ax} \leq \mathbf{b}$ // $\mathbf{A}$ is a *mxn* matrix; $\mathbf{b} = (b_1, b_2, \ldots, b_n)$

$\mathbf{x} \geq \mathbf{0}$

$x_i \in Z$

Example: Course Selection Problem

- A student is about to finalize course selection for the coming semester, given the following requirement
  - Minimum credits per semester: 8

	Schedule	Credits	Est. workload (per week)
1. Metaverse	MW 2:00-3:30pm	3	8 hrs
2. How to start a start-up	TT 2:00-3:00pm	2	4 hrs
3. Linear programming (LP)	MW 9:00-11:00am	4	10 hrs
4. Analog circuits	TT 1:00-3:00pm	4	12 hrs

Question: Which courses should this student choose to minimize workload?

ILP Formulation for Course Selection

- Define decision variables (i = 1, 2, 3, 4):

$$x_i \begin{cases} 1 & \text{if course i is taken} \\ 0 & \text{otherwise} \end{cases}$$

	Time	CRs	Work
1. Metaverse	MW 2-3:30pm	3	8 hrs
2. Start-up	TT 2-3pm	2	4 hrs
3. LP	MW 9-11am	4	10 hrs
4. Analog	TT 1-3pm	4	12 hrs

- Total expected work hours: $8x_1+4x_2+10x_3+12x_4$
- Total credits taken: $3x_1+2x_2+4x_3+4x_4$
- Account for the schedule conflict: $x_2+x_4 \leq 1$

- Complete ILP formulation (in canonical form):

minimize $8x_1+4x_2+10x_3+12x_4$

s.t. $3x_1+2x_2+4x_3+4x_4 \geq 8$

$x_2+x_4 \leq 1$

$x_i \in \{0,1\}$

Resource Constrained Scheduling (RCS)

- When functional units are limited
  - Each functional unit can only perform one operation at each clock cycle
    - e.g., if there are only K adders, no more than K additions can be executed in the same c-step
- A typical resource-constrained scheduling problem for DFG
  - Given the number of functional units of each type, minimize latency (in cycles)
  - *NP-hard*

ILP Formulation of RCS: Binary Variables

- Binary decision variables $x_{i,k}$
  - $x_{i,k} = 1$ if operation i starts at step k, otherwise = 0
    - $1 \leq i \leq N, 1 \leq k \leq L$
    - N is the **total number of operations**
    - L is the given **upper bound on latency**

ILP Formulation of RCS: Derived Variables

- Binary decision variables $x_{i,k}$
  - $x_{i,k} = 1$ if operation i starts at step k, otherwise = 0
    - $1 \leq i \leq N, 1 \leq k \leq L$
    - N is the **total number of operations**
    - L is the given **upper bound on latency**

- Derived integer variables t_i

$$t_i = \sum_{k=1}^{L} k \cdot x_{i,k}$$

t_i indicates the actual **start time** of operation i

ILP Formulation of RCS: Constraints (1)

- **Unique start times**: an operation must start at one and only one of the available steps

$$\forall i \in [1, N] : \sum_k x_{i,k} = 1$$

- **Dependence must be satisfied** (assuming no chaining)

$$\forall (i, j) \in E : t_j \geq t_i + d_i \rightarrow \sum_k k \cdot x_{j,k} \geq \sum_k k \cdot x_{i,k} + d_i$$

Operation j must not start before i completes if j depends on i

d_i : latency of operation i

- d_i = 1 means a single-cycle operation
- d_i > 1 indicates a multi-cycle operation

Start Time vs. Active Time(s)

- When $d_i = 1$, the following are the same
  - Does operation i start at step k?
  - Is operation i actively running at step k?
  - Same equality check: if x_{ik} is 1

- When $d_i > 1$, the following questions are different
  - Does operation i **start** at step k? Simply check if x_{ik} is 1
  - Is operation i **active** at step k? Check if the following holds

$$\sum_{l=k-d_i+1}^{k} x_{i,l} \stackrel{?}{=} 1$$

Is Operation i Still Active at Step k ?

- Is operation 9 active (running) at step 6? assuming d_9 = 3

  if and only if $x_{9,6} + x_{9,5} + x_{9,4}$ equals 1 ⇨ $\sum_{l=6-3+1}^{6} x_{9,l} \stackrel{?}{=} 1$

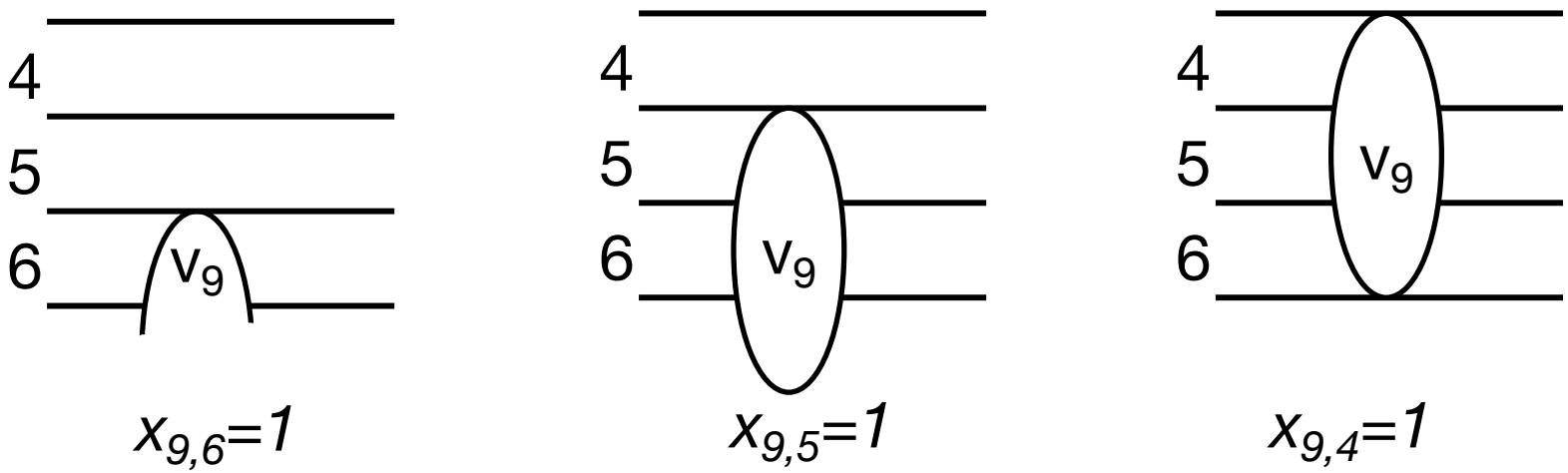

- Notes
  - Only one (if any) of the above three cases can happen
  - To meet resource constraints, we must check the same equality for ALL steps, and ALL operations of that type

ILP Formulation of RCS: Constraints (2)

- Physical resource limits
  - R denotes the total number of different resource types (RT)
  - $RT(i) \in [1, R]$ is the resource type of operation i
  - a_r is the number of physically available resources of type r

At any step k, the total number of active operations of the same type r must not exceed a_r, the number of physically available resources for type r

$$\forall k \in [1, L], \forall r \in [1, R] : \boxed{\sum_{i:RT(i)=r}} \boxed{\sum_{l=k-d_i+1}^{k} x_{i,l}} \leq a_r$$

Sum over operations of resource r

If operation i is active at step k

The above summation counts the number of operations active at step *k* that use resource *r*

ILP Formulation of RCS: Putting It Together

- **Unique start times**

$$\forall i \in [1, N] : \sum_k x_{i,k} = 1$$

- **Dependence must be satisfied** (assuming no chaining)

$$\forall (i, j) \in E : t_j \geq t_i + d_i \rightarrow \sum_k k \cdot x_{j,k} \geq \sum_k k \cdot x_{i,k} + d_i$$

- **Physical resource limits**

$$\forall k \in [1, L], \forall r \in [1, R] : \sum_{i:RT(i)=r} \sum_{l=k-d_i+1}^{k} x_{i,l} \leq a_r$$

ILP Formulation of RCS: Objective Function

- For simplicity, we introduce a pseudo node v_{sink} to serve as a unique sink of the DFG
  - This node depends on all the original primary output nodes

- To minimize the overall latency, we simply minimize the start time of the sink node

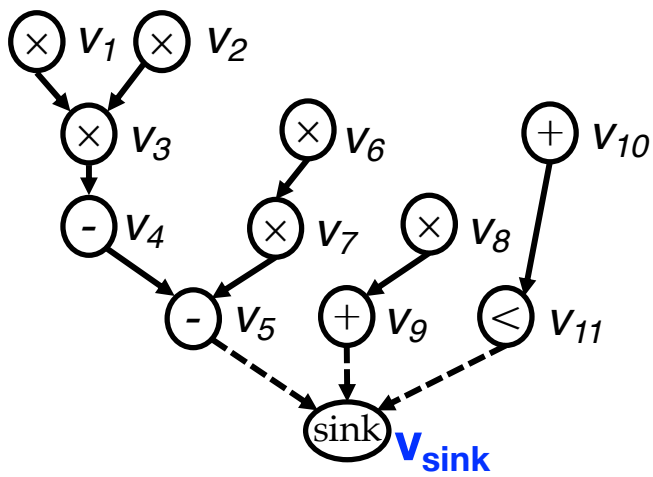

$$\boldsymbol{min}\ t_{sink}$$

$$\Downarrow$$

$$\boldsymbol{min} \sum_{k=1}^{L} k \cdot x_{sink,k}$$

Use of ASAP and ALAP

- In general, the following helps the ILP solver run faster
  - Minimize # of variables and constraints
  - Simplify the constraints

- We can write the ILP without ASAP/ALAP, but using ASAP and ALAP can simplify the constraints

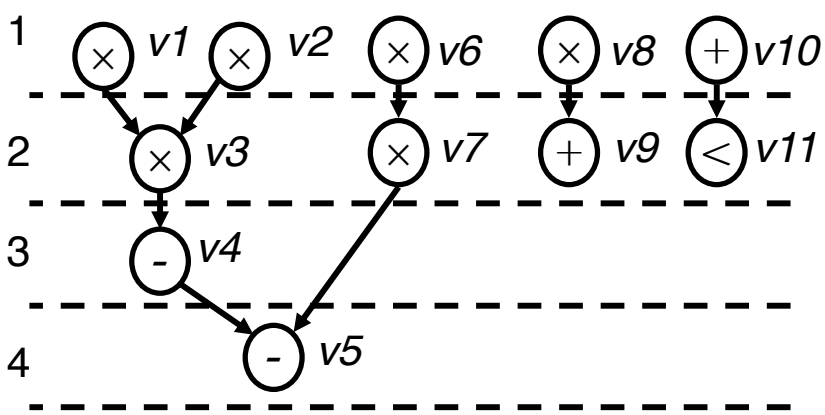

ASAP schedule

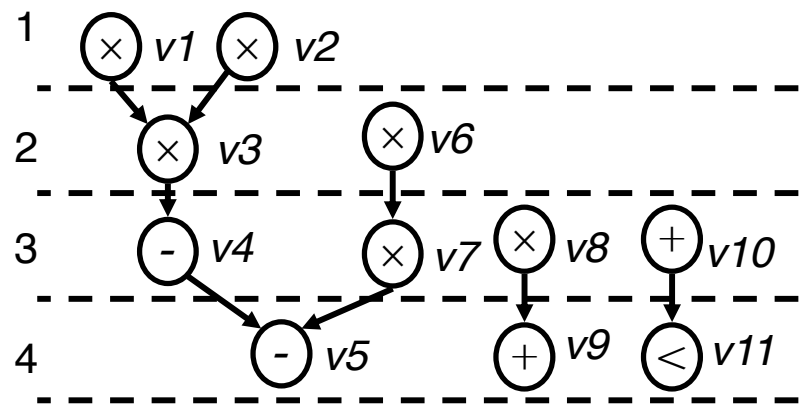

ALAP schedule

ILP Formulation: Unique Start Time Constraints

$$x_{il} = 0 \quad for \quad l < t_i^S \quad and \quad l > t_i^L$$
$$(t_i^S = ASAP(v_i), t_i^L = ALAP(v_i))$$

- Without using ASAP and ALAP

$$x_{1,1} + x_{1,2} + x_{1,3} + x_{1,4} = 1$$
$$x_{2,1} + x_{2,2} + x_{2,3} + x_{2,4} = 1$$
$$\ldots$$
$$x_{6,1} + x_{6,2} + x_{6,3} + x_{6,4} = 1$$
$$\ldots$$
$$x_{9,1} + x_{9,2} + x_{9,3} + x_{9,4} = 1$$
$$\ldots$$

- Using ASAP and ALAP

$$x_{1,1} = 1$$
$$x_{2,1} = 1$$
$$\ldots$$
$$x_{6,1} + x_{6,2} = 1$$
$$\ldots$$
$$x_{9,2} + x_{9,3} + x_{9,4} = 1$$
$$\ldots$$

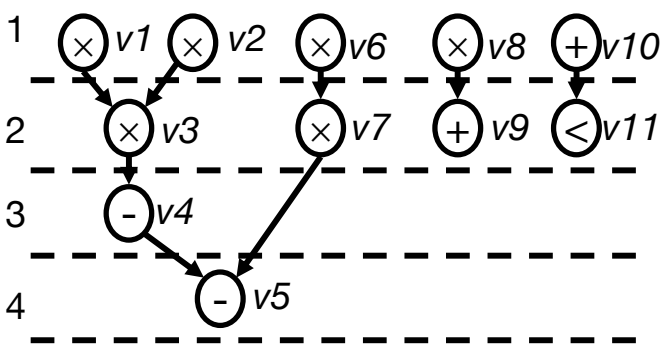

ASAP schedule

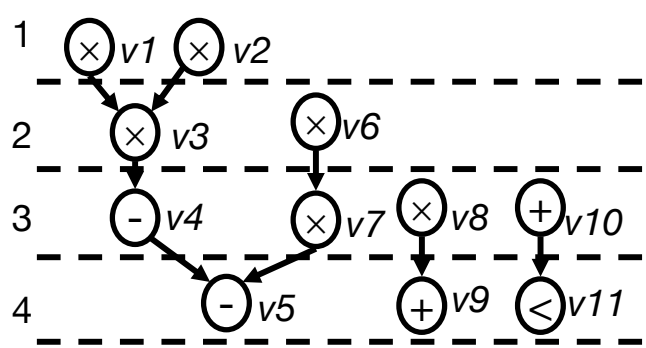

ALAP schedule

assume L=4

ILP Formulation: Dependence Constraints

- Using ASAP and ALAP, the non-trivial inequalities are: (assuming no chaining and single-cycle ops)

$$2x_{7,2} + 3x_{7,3} - x_{6,1} - 2x_{6,2} \geq 1$$
$$4x_{5,4} - 2x_{7,2} - 3x_{7,3} \geq 1$$
$$2x_{9,2} + 3x_{9,3} + 4x_{9,4} - x_{8,1} - 2x_{8,2} - 3x_{8,3} \geq 1$$
$$2x_{11,2} + 3x_{11,3} + 4x_{11,4} - x_{10,1} - 2x_{10,2} - 3x_{10,3} \geq 1$$

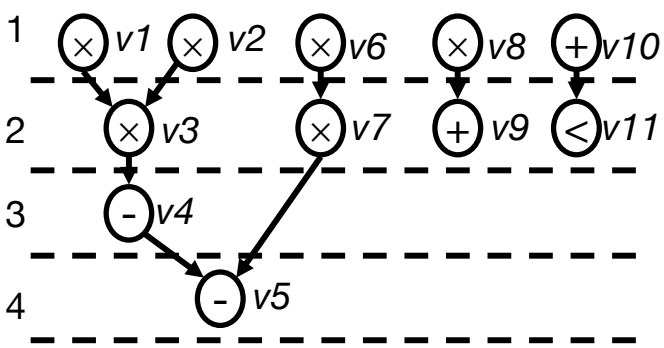

ASAP schedule

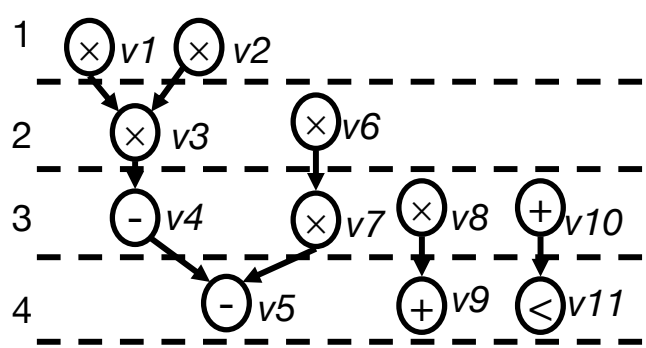

ALAP schedule

assume L=4

ILP Formulation: Resource Constraints

- Resource constraints (assuming 2 multipliers and 1 ALU)

$$x_{1,1} + x_{2,1} + x_{6,1} + x_{8,1} \leq 2$$
$$x_{3,2} + x_{6,2} + x_{7,2} + x_{8,2} \leq 2$$
$$x_{7,3} + x_{8,3} \leq 2$$

$$x_{10,1} \leq 1$$
$$x_{9,2} + x_{10,2} + x_{11,2} \leq 1$$
$$x_{4,3} + x_{9,3} + x_{10,3} + x_{11,3} \leq 1$$
$$x_{5,4} + x_{9,4} + x_{11,4} \leq 1$$

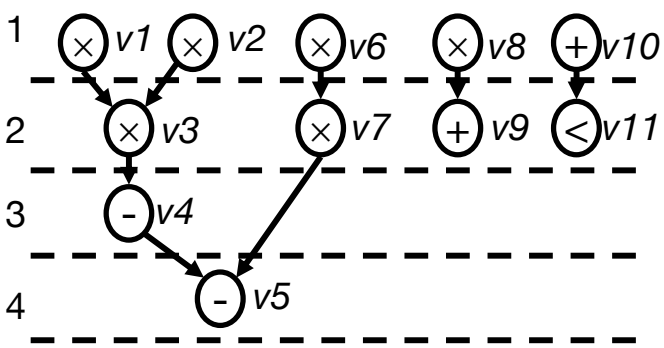

ASAP schedule

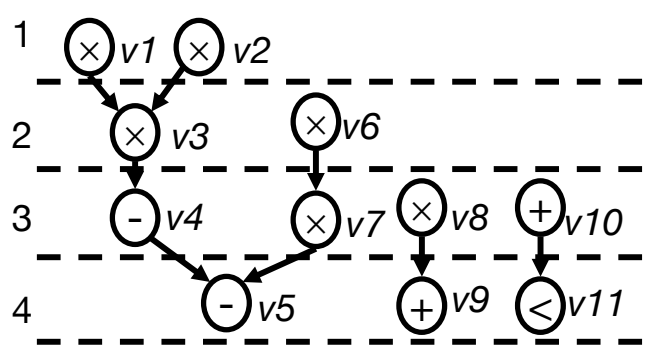

ALAP schedule

assume L=4

ILP Summary

- Pros: versatile modeling ability
  - Can be extended to handle almost every design aspect
    - Resource allocation
    - Module selection
    - Area, power, etc.
- Cons: computationally expensive
  - #variables = O(#nodes * #steps)
  - 0-1 variables: need extensive search to find optimal solution

Next Lecture

- More scheduling algorithms

Acknowledgements

- These slides contain/adapt materials developed by
  - Ryan Kastner (UCSD)